Level compensator LC16-M1820, G1/8" male, stroke 20, 01.24.952

- Adjust differences in levels, for example on lifting devices with several suction cups.
- Less demand for exact positioning of vacuum handling device.
- Provides a certain degree of shock and vibration absorption.
- Allows for soft placement of cups on sensitive or thin objects.
- Non-rotational design, suitable for use with oval suction cups.
- Wide range of thread connections and stroke lengths.

General

Material	SS, Al
Recommended suction cup size, max.	Ø50mm (Area: 3.10 in2)
Temperature	32 – 140 °F
Volume	0.07 in^3
Weight	1.27 oz

Mechanical data

Action range/Stroke	0.79 in
Spring constant	1.54 lbf/in
Spring force	0.81 – 2.02 lbf
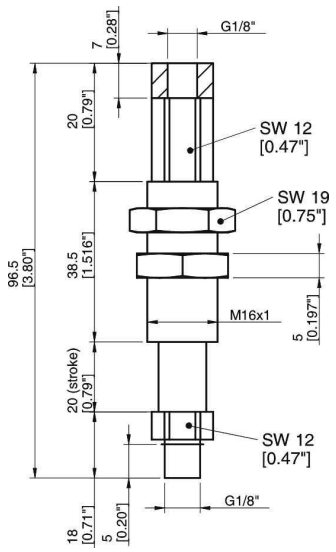
Dimensional drawings